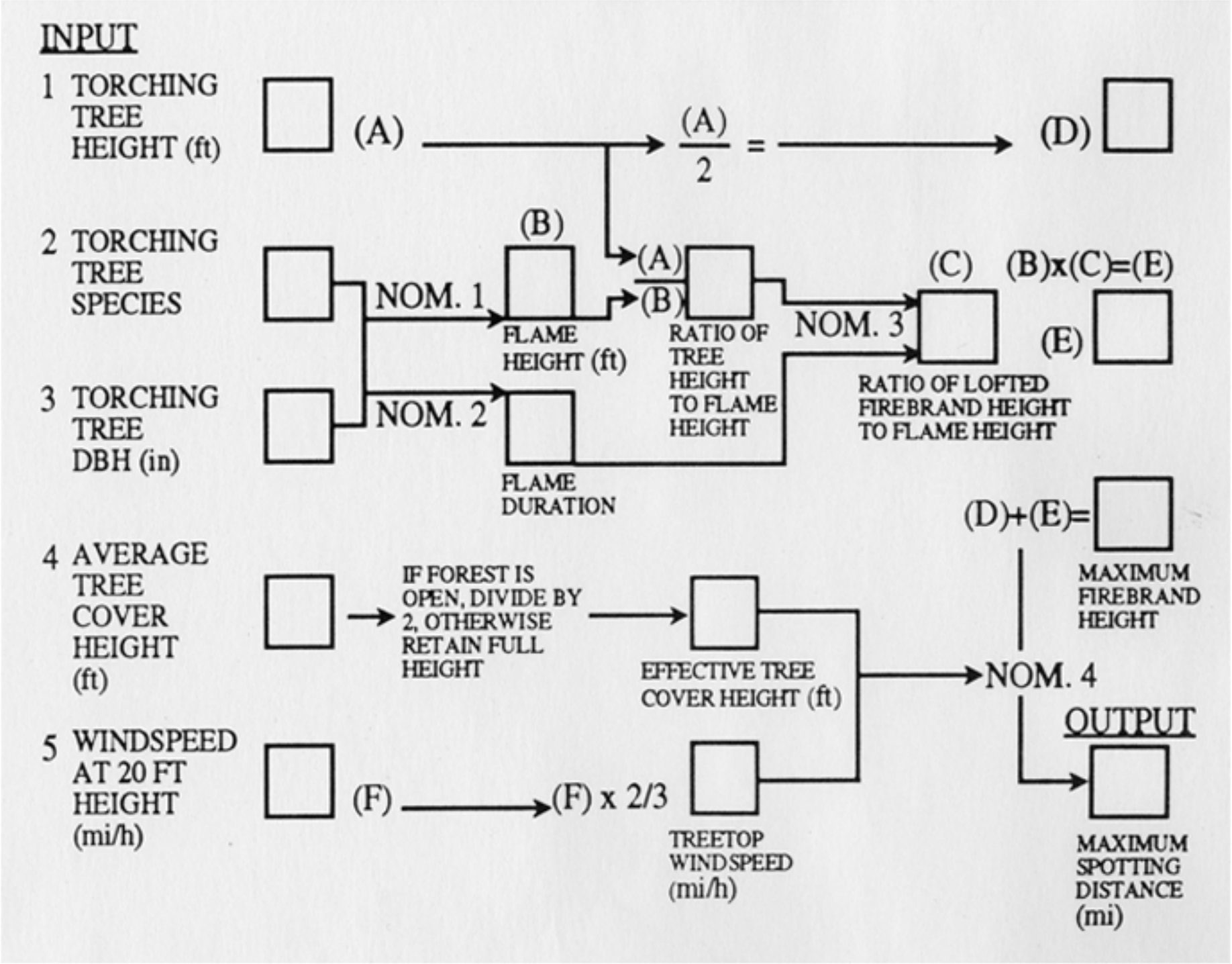
INPUT
1 TORCHING TREE HEIGHT (ft)
(A)
(A)/2 =
(D)
2 TORCHING TREE SPECIES
(B)
NOM. 1
FLAME HEIGHT (ft)
(A)/(B)
RATIO OF TREE HEIGHT TO FLAME HEIGHT
NOM. 3
(C)
(B)x(C)=(E)
(E)
RATIO OF LOFTED FIREBRAND HEIGHT TO FLAME HEIGHT
3 TORCHING TREE DBH (in)
NOM. 2
FLAME DURATION
(D)+(E)=
MAXIMUM FIREBRAND HEIGHT
4 AVERAGE TREE COVER HEIGHT (ft)
IF FOREST IS OPEN, DIVIDE BY 2, OTHERWISE RETAIN FULL HEIGHT
EFFECTIVE TREE COVER HEIGHT (ft)
NOM. 4
OUTPUT
5 WINDSPEED AT 20 FT HEIGHT (mi/h)
(F)
(F) x 2/3
TREETOP WINDSPEED (mi/h)
MAXIMUM SPOTTING DISTANCE (mi)